Revision: C	Designer:	Date: 09/12/2021
	Approved By: CP	Approved Date: 21-10-2022

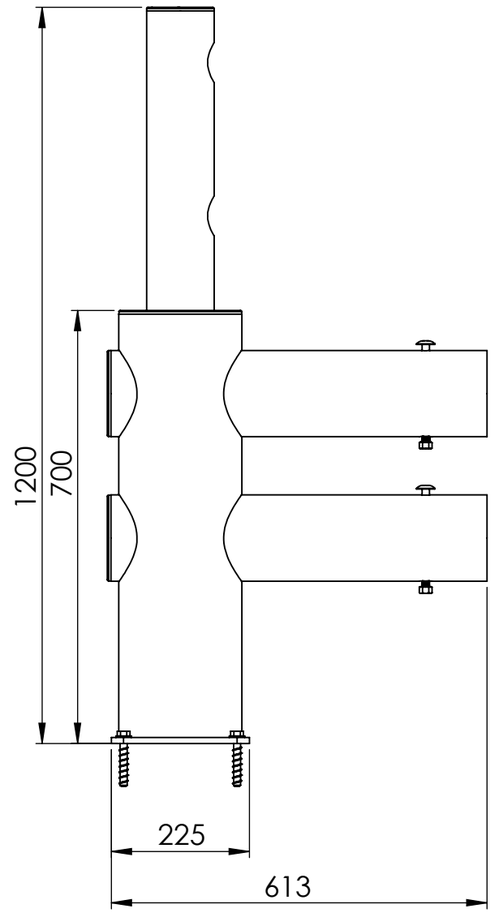

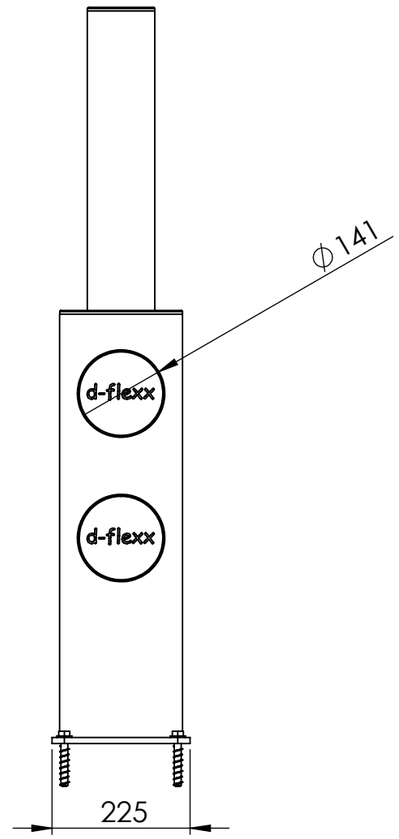

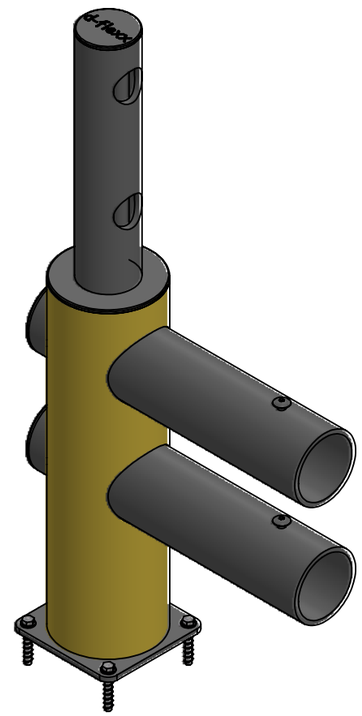

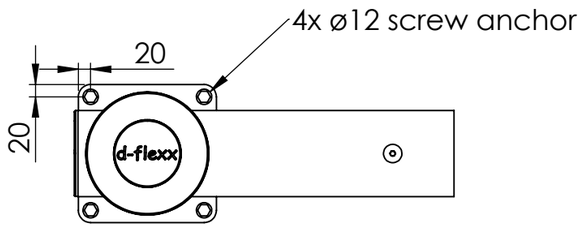

Raw material: N/A	
Material: N/A	
Tolerance: 2768-1 m	Weight (g): 20232.90
Colour: N/A	
Drawing NO: DFDH-M-E	
Description: dflexx Lima endpost ø200 x 1200mm	

All dimensions are in mm unless otherwise specified | If nothing else specified all edges must be chamfered | SHEET 3 OF 3 | Scale:1:10 | SIZE:A3