Revision: E	Designer:	Date: 14/12/2021	
	Approved By: FWS	Approved Date: 16-03-2023	

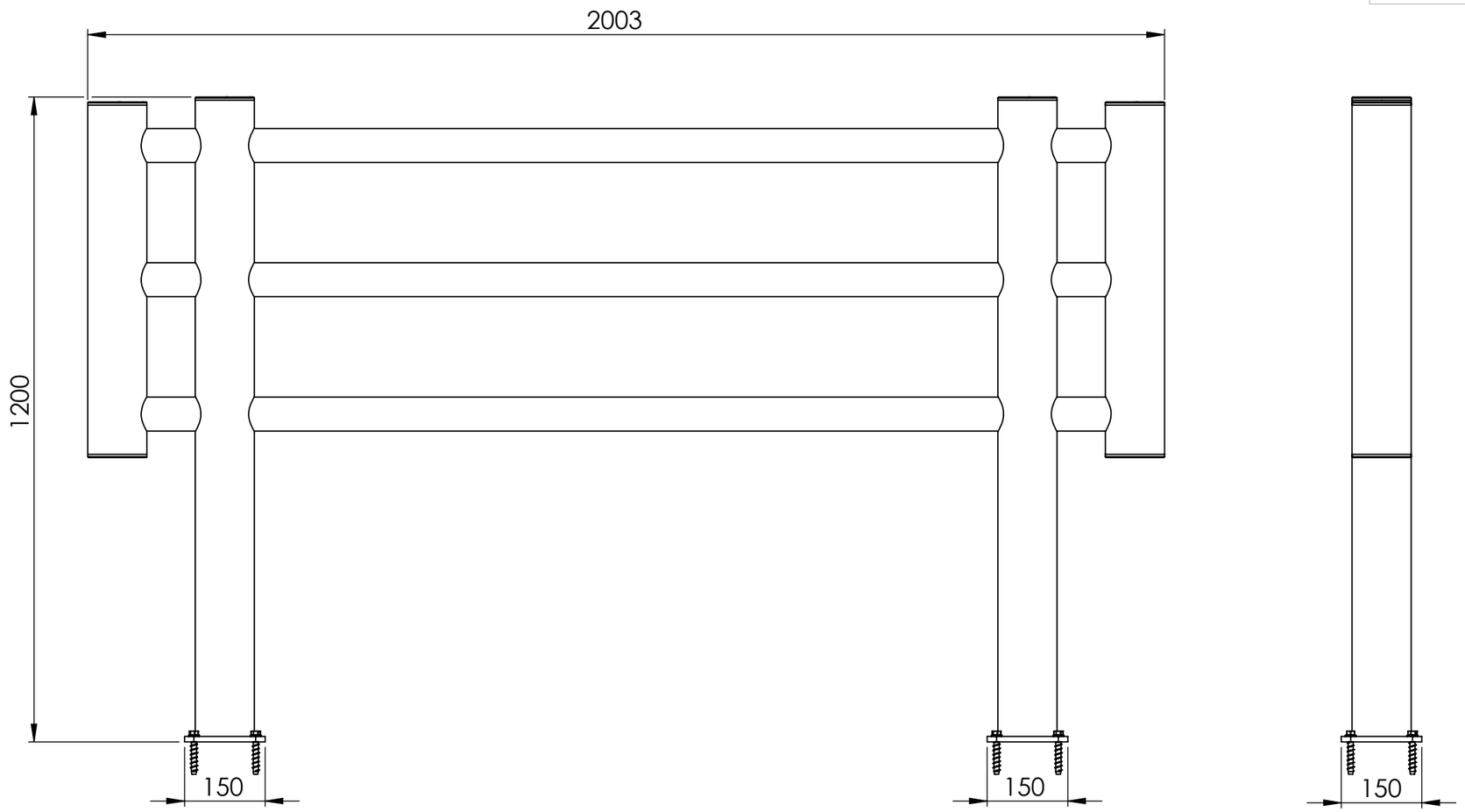

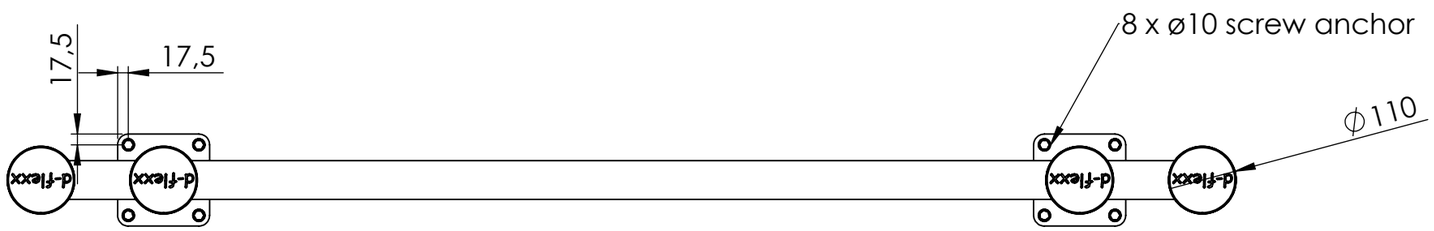

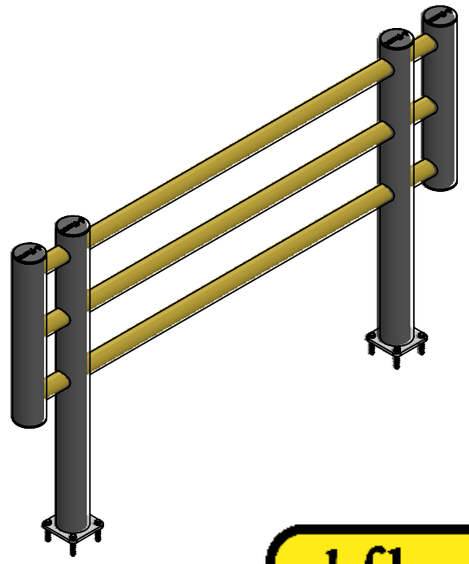

d-flexx

Raw material:N/A	
Material: N/A	
Tolerance: 2768-1 m	Weight (g):26184.37
Colour: N/A	
Drawing NO:DFFS-FU3	
Description: dflexx Foxtrot barrier 2003mm	

All dimensions are in mm unless otherwise specified

If nothing else specified all edges must be chamfered | SHEET 3 OF 3 | Scale:1:10 | SIZE:A3