Revision: B	Designer:	Date: 09/12/2021
	Approved By: CP	Approved Date: 21-10-2022

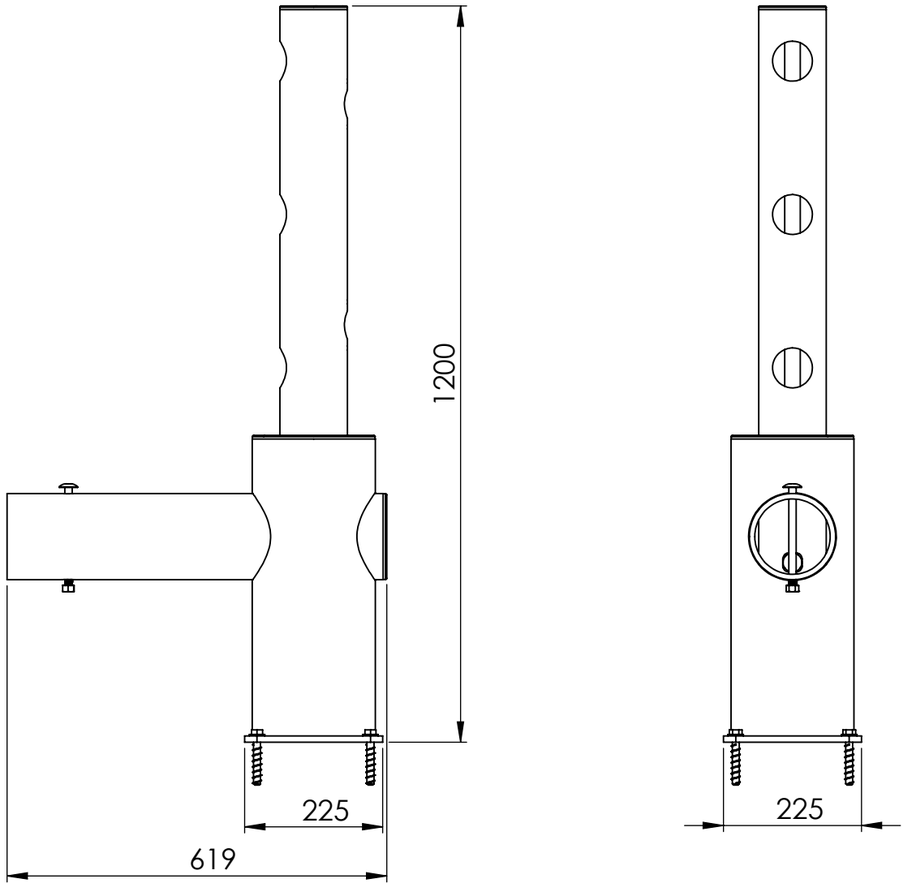

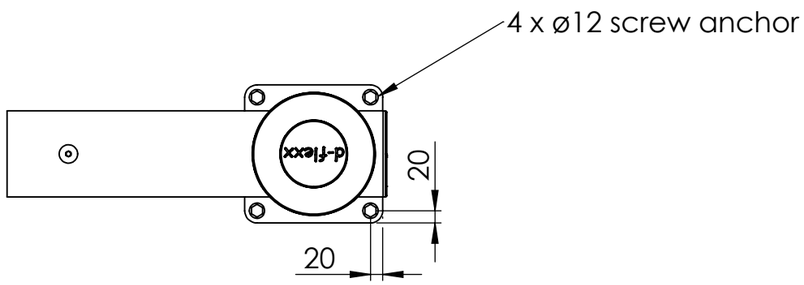

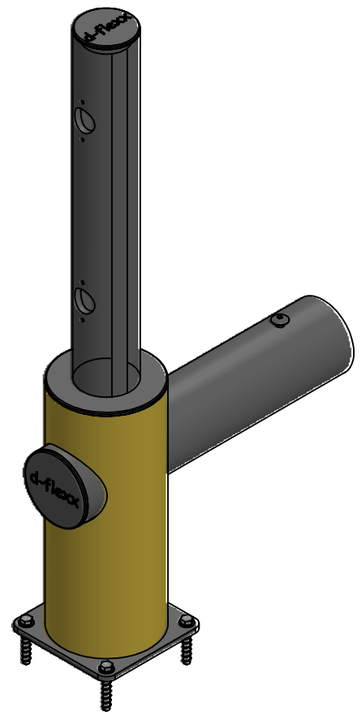

Raw material:N/A	
Material: N/A	
Tolerance: 2768-1 m	Weight (g): 16864.25
Colour: N/A	
Drawing NO:DFJU+TM	
Description: dflexx Juliet Echo plus middle post ø200 x 1200mm	

All dimensions are in mm unless otherwise specified

If nothing else specified all edges must be chamfered

SHEET 3 OF 3 Scale:1:10 SIZE:A3